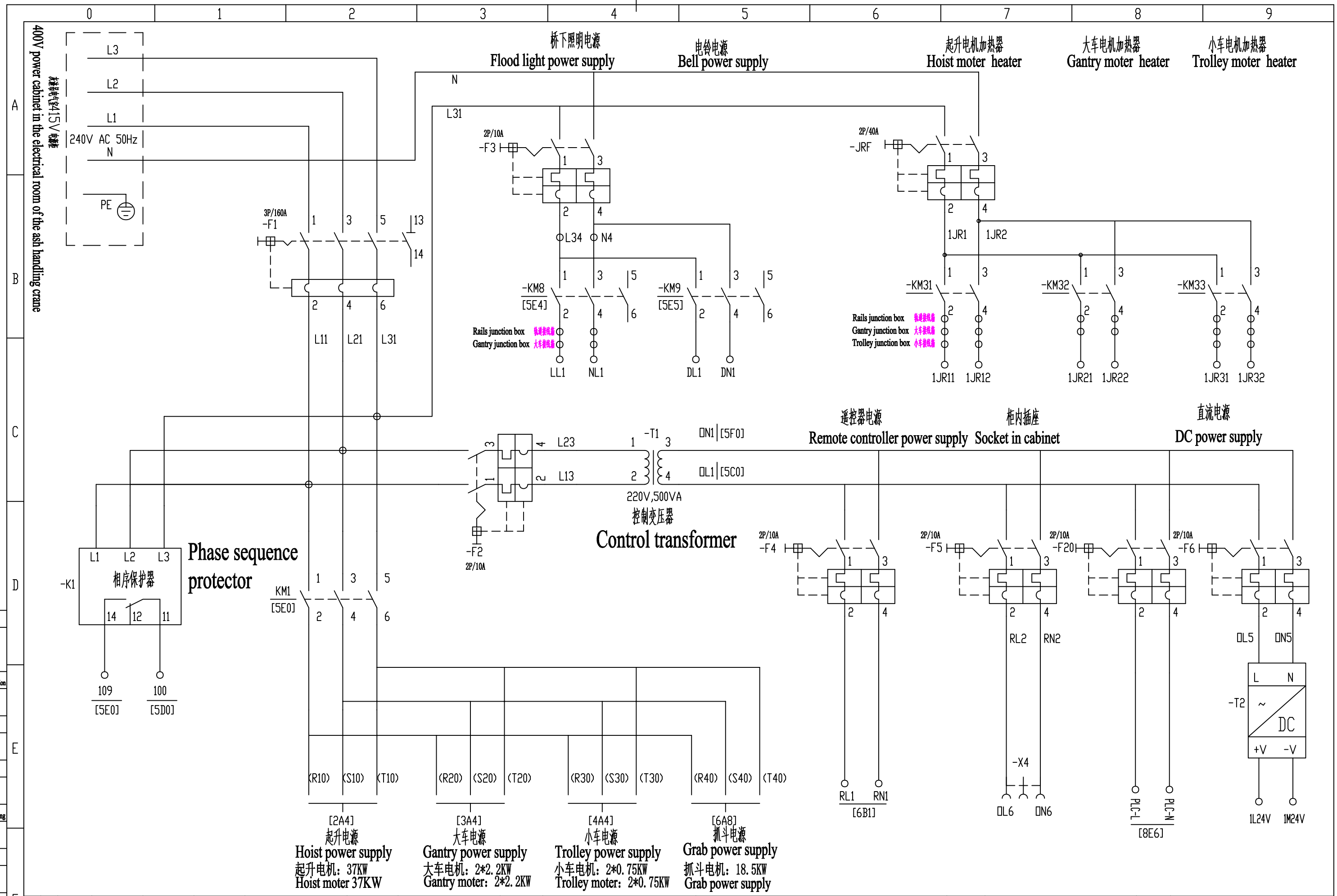

d					设计 Designed by			
c					审查 Reviewed by			
b					主管设计 Chief Designer			
a								
标记 Mark	处数 Nos.	更改文件号 Changed File No.	签字 Signature	日期 Date				

项目 Item	城市生活垃圾焚烧发电厂 灰渣抓斗桥式起重机 Municipal solid waste incineration power plant Bridge Crane of Ash Handling Grab	浙江浙起机械有限公司 Zhejiang Zheqi Machinery Co., Ltd.	名称 Description	电源 Power supply	图号 DWG No. ZQQZ/0103-1 下页 Next page 2 本页 This page 1
名称 Description	灰渣吊电气原理图 Electrical Schematic Diagram of Ash Handling Crane	地址：浙江省金华市金东区岭下朱工业区 Add: Lingxiazhu Industrial Zone, Jindong District, Jinhua City, Zhejiang Province	质量 Quality	比例 Scale	= 01 + **
					张数 Sheet 9 / 张次 of 1

Total sheet

Borrowed (General) Parts Registration

Traced by

Checked by

General No. of Old Traced Drawing

Base Drawing Total No.

Signature

Date